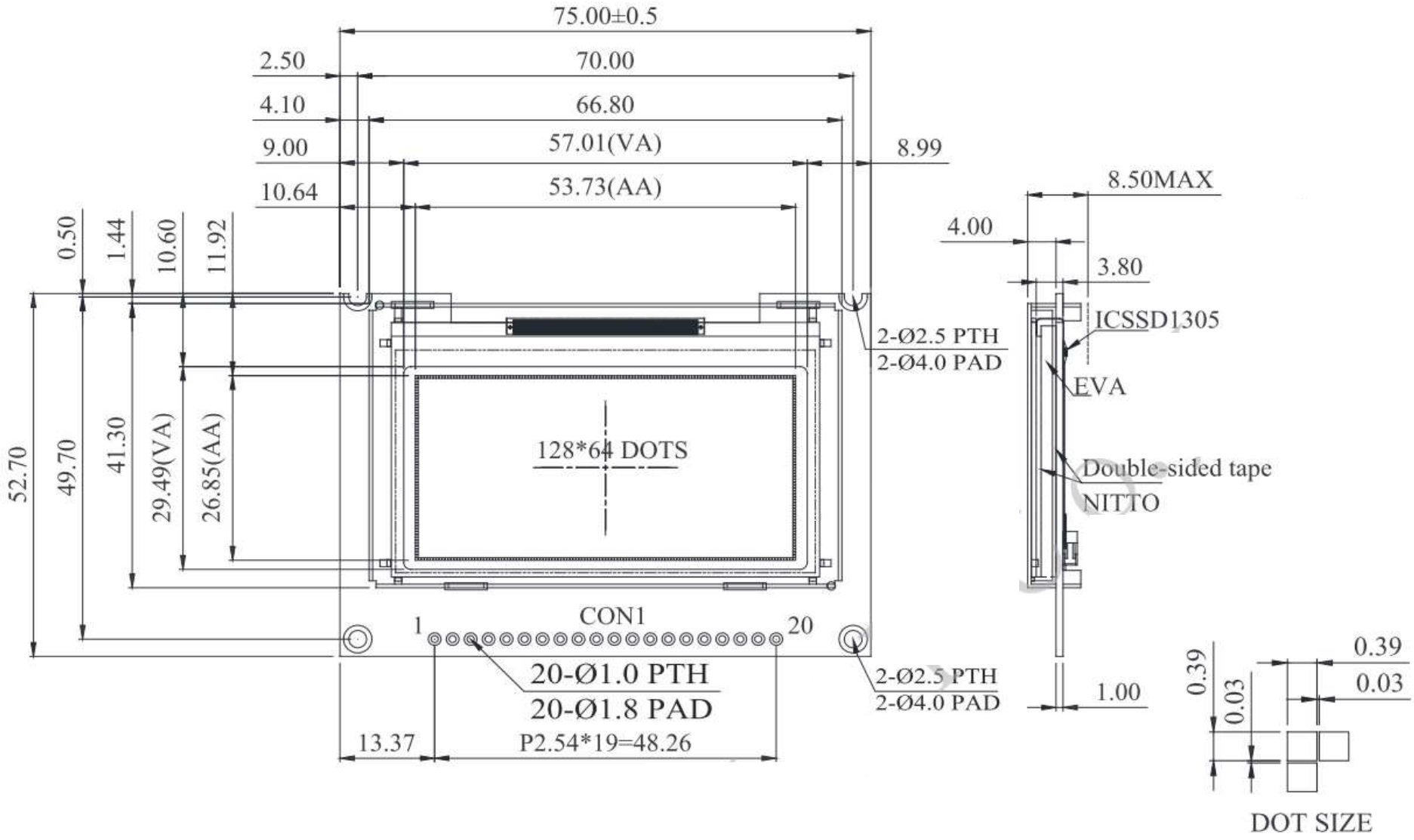
75.00±0.5
2.50
70.00
4.10
66.80
9.00
57.01(VA)
8.99
10.64
53.73(AA)
0.50
1.44
10.60
11.92
52.70
49.70
41.30
29.49(VA)
26.85(AA)
128*64 DOTS
2-Ø2.5 PTH
2-Ø4.0 PAD
CON1
1
20
20-Ø1.0 PTH
20-Ø1.8 PAD
13.37
P2.54*19=48.26
8.50MAX
4.00
3.80
ICSSD1305
EVA
Double-sided tape
NITTO
1.00
0.39
0.03
DOT SIZE